Mounting instruction of SMCG

SMCG

PART NO.: 75-0329-007



PART NO.: 75-0328-007



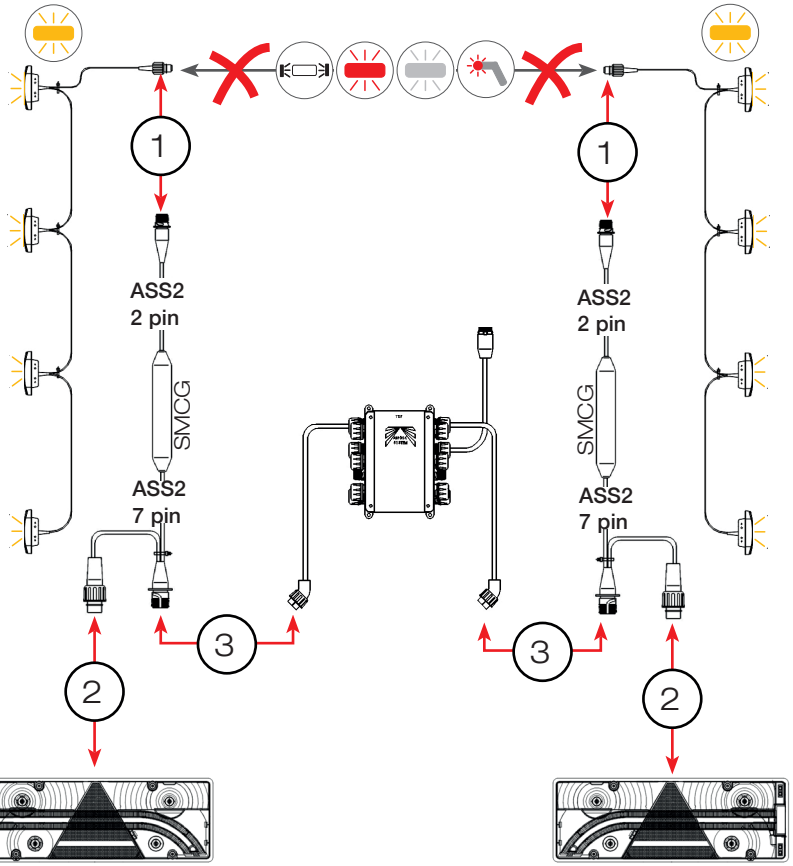

U=10-32V

ADR-Zone 2 approved
IP6K9K

rear position light

front position light

sidemarker light

end outline marker

number plate light

direction indicator light

Mounting instruction of SMCG-double

SMCG double

PART NO.: 75-0331-007

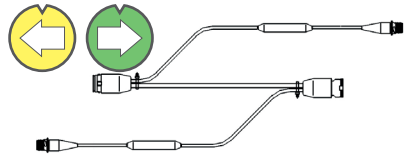

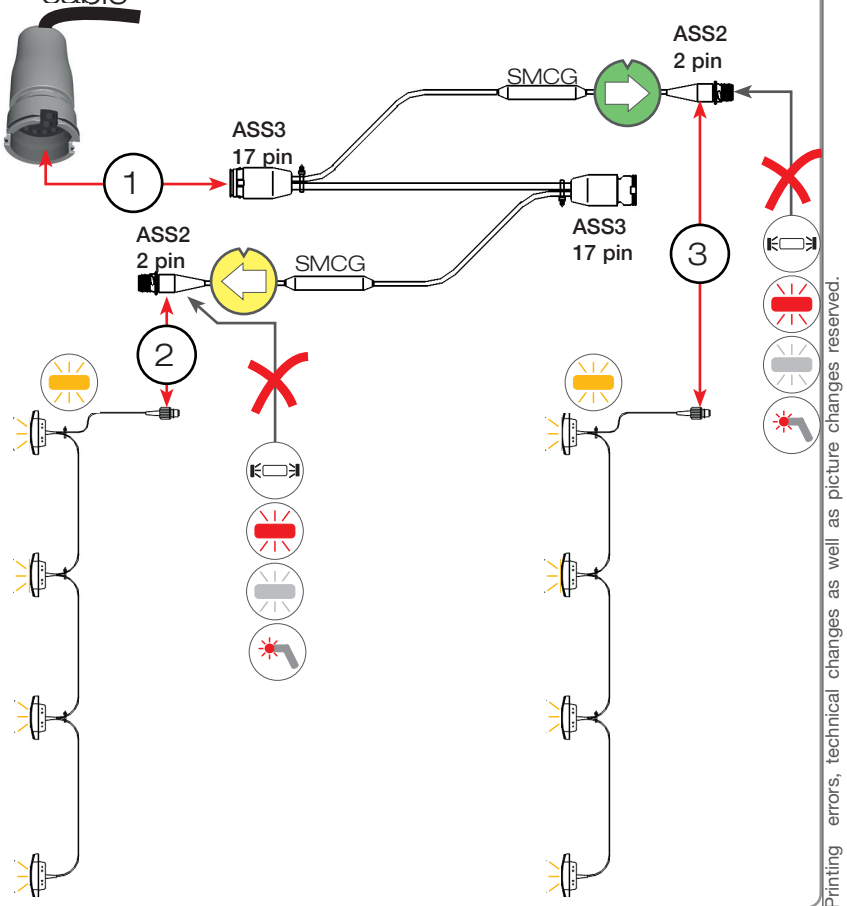

Aspöck Systems GmbH | Enzing 4 | 4722 Peuerbach | AUSTRIA
Tel.: +43 72 76 / 26 70-0 | Fax: DW 1199 | office@aspoeck.at | www.aspoeck.com

Printing errors, technical changes as well as picture changes reserved.

U=10-32V

ADR-Zone 2 approved
IP6K9K